ABS American BioTech Supply

CUTSHEET

Interior
PH-ABT-HC-UCFS-0104G

Front View

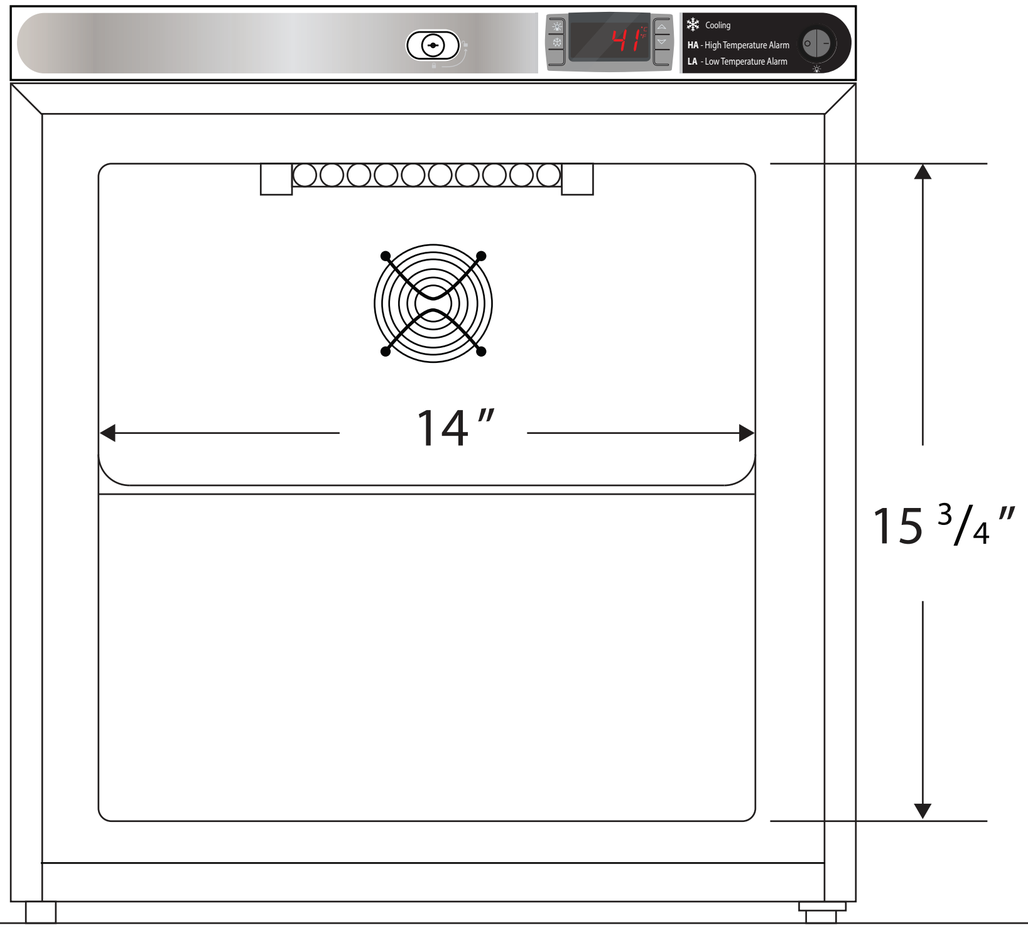

Side View

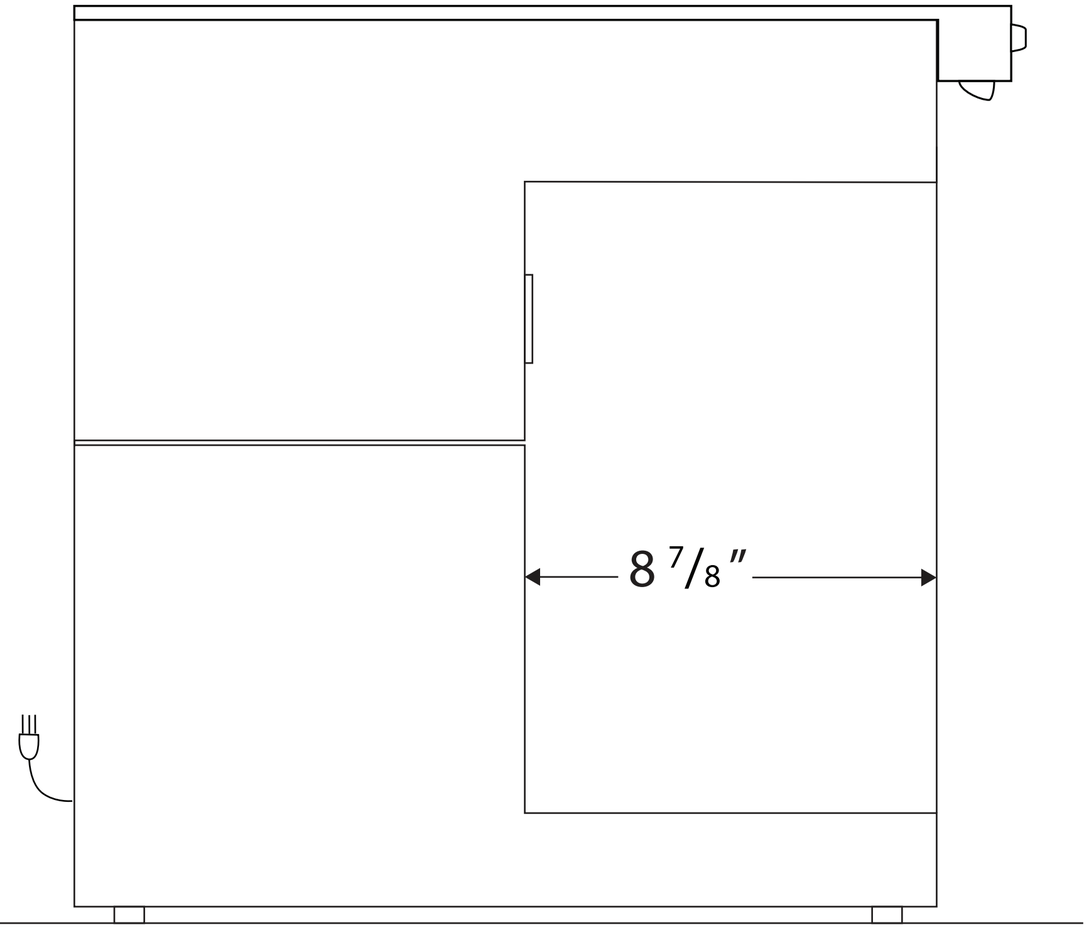

115VAC/60Hz/1PH
NEMA-5-15P

Cu. Ft	Defrost	Door	Int Door	Shelves	Interior Dim.			Refrigerant	H.P.	Amps	Weight
					W″	D″	H″				
1	Cycle	1 Glass	0	2 Adj	14	8 7/8	15 3/4	R600a	1/8	.90	63 lbs.

Note: Interior dimensions are estimates and subject to change without notice